CONCRETE CANVAS®
Concrete on a Roll

2206.01.EN

MADE IN UK

CONCRETE CANVAS®

Concrete on a Roll

USER GUIDE: JOINTING & FIXING

The Queen's Awards for Enterprise: International Trade 2019

Board of Trade Winner 2018

Winner Technical Innovation Award

Innovation Award ICE Wales Cymru Awards 2017

British Board of Agrément Certified

ACS Registrars Ltd ISO 9001 Accreditation

Certified CPD Provider

Corporate Member

Proud Supporter of Exporting is Great

RAIL ROAD MINING PETROCHEM AGRO PUBLIC WORKS UTILITIES DEFENCE DESIGN SHELTER

www.concretecanvas.com

USER GUIDE: JOINTING & FIXING

Concrete Canvas® is part of a revolutionary new class of construction materials called Geosynthetic Cementitious Composite Mats (GCCMs). It is a flexible, concrete filled geosynthetic, that hardens on hydration to form a thin, durable, water proof and fire resistant concrete layer. Essentially, it's concrete on a roll. The following guide provides useful information for installers, customers and specifiers of Concrete Canvas® GCCM (CC). It provides an overview of methods for jointing and fixing of CC material. The versatile nature of CC means that this document is not exhaustive and is intended for guidance purposes only.

1.0 Cutting Concrete Canvas® GCCM

1.1 Cutting Unset CC

A 'snap-off blade' utility knife can be used for cutting CC before it is hydrated or set. When cutting unset CC a 15-20mm allowance should be left from the cut edge due to potential loss of fill. For larger projects where numerous cuts are required it is recommended to use a powered disc-cutter, angle grinder or a self sharpening fabric cutter. If cutting with a disc cutter, it is recommended to wet the cut beforehand to minimise dust generation.

Cutting CC using a 'snap-off blade' utility knife

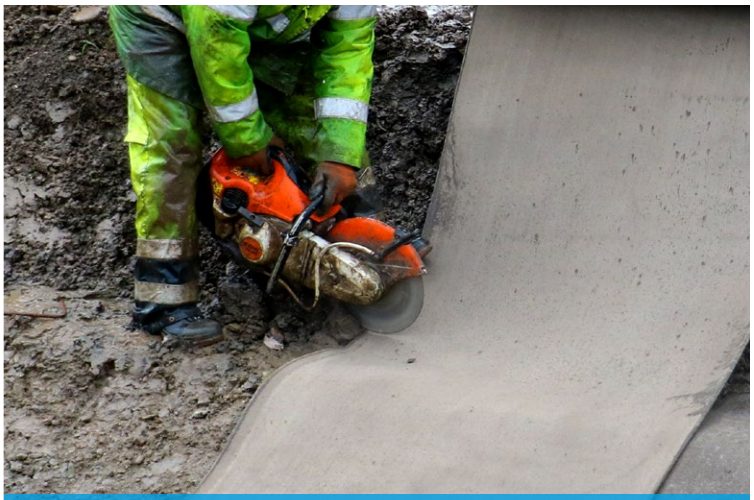

Cutting CC using a powered disc-cutter

1.2 Cutting Set CC

Set CC can be cut using the same tools used for cutting conventional concrete, such as disc cutters, angle grinders or good quality tile cutters. CC sheets can also be water-cut for applications where a high resolution is required such as for signage or sculptural works.

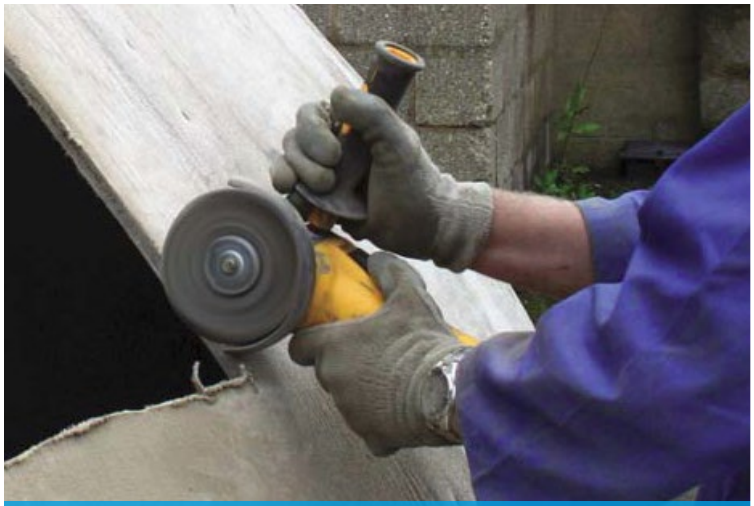

Cutting set CC using an angle grinder

Water-cut CC

CONCRETE CANVAS®
+44 (0) 345 680 1908
info@concretecanvas.com
www.concretecanvas.com

2.0 Fixing Specification

2.1 To Soil

Anchor Trench: Burying the perimeter edges of CC in an anchor trench is essential for the majority of installations. This will help prevent undermining from surface water and provide a neat edge termination. Used in conjunction with pegs or when back-filled with concrete an anchor trench provides an effective means of securing CC to the substrate. Typically anchor trenches are used at the crest and toe of a slope and along the shoulders of a channel and leading and trailing edges to prevent wind and water ingress. **We would therefore recommend anchor trenching the entire perimeter edge of CC wherever possible.**

Pegs: Galvanised steel J-pegs are available from Concrete Canvas® Ltd in lengths of 250mm and 380mm. Pegs may be sourced from alternate suppliers but must have a sufficiently sharp point to penetrate the CC and a head design that will capture the surface of CC. Peg length and spacing should be selected based on soil conditions and application. Pegs should be applied at joints where possible to secure adjacent layers together.

Soil Nails / Ground Anchors: For high load applications or where ground conditions are poor, such as with slope protection, slope stabilisation or for high flow applications, it is recommended to use CC in conjunction with soil nails, ground anchors or earth percussion anchors. The anchor plate design should be circular where possible or have radiused corners to avoid stress concentrations. The soil nail and anchor plate specification should be approved by a qualified geotechnical engineer.

2.2 To Concrete

Mortar: A suitable mortar can be used to join and seal CC to existing concrete infrastructure such as head walls and slabs. Most off-the-shelf mortars will bond well to the fibrous surface of CC. We recommend applying the mortar to the CC immediately after hydration or wetting the CC surface if applying post-set.

Masonry fixings (bolts/screw anchors): A range of conventional masonry fixings, such as stainless steel self-tapping masonry bolts, concrete screw anchors or stainless steel fixings with washers are recommended to fix CC to other concrete surfaces. We recommend a minimum washer/head diameter of 15mm or use a clamping plate to prevent pull-through.

2.3 To Rock

Rock Bolts: For use on hard or rocky substrates, the number and type of rock bolt should be selected based on the pull-out force requirement. A suitable head design should be selected to prevent stress concentrations. A minimum head diameter of 15mm is normally recommended and plates up to 150mm are often used.

+44 (0) 345 680 1908 info@concretecanvas.com www.concretecanvas.com

2.4 To Steel

Hog rings: Ideal for fixing CC to wire mesh, gabion baskets or fencing, hog-rings are available in a range of sizes and can be applied with a manual or powered hog-ringer. The hog rings should be applied to CC prior to hydration.

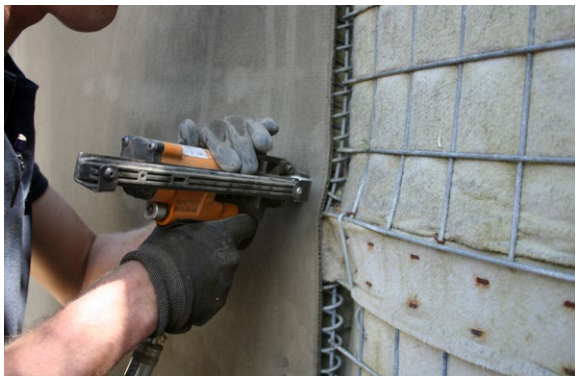

Tech-screws: Self-drilling screws such as tech-screws are suitable for fixing CC to sheet steel. A washer may be required to prevent pull-through.

2.5 To Wood

Screws / Staples / Nails / Adhesive: A range of conventional fixings can be used to fix CC to substrates such as wood. In its pre-hydrated form CC behaves like a thick geotextile and can be fastened with suitable screws, staples, nails or adhesives.

2.6 Other

The flexible nature of CC means that it can be jointed, sealed and fixed using a large selection of products available on the market. The 3 following listed joints (3.0) are suitable for the majority of applications and summarised in the table at the end of this document (5.0). Some other fixings which may be useful are also shown in the images below.

Clamping band fixing

Pre-drilled galvinised steel bar fixing

+44 (0) 345 680 1908 info@concretecanvas.com www.concretecanvas.com

3.0 Jointing Specifications

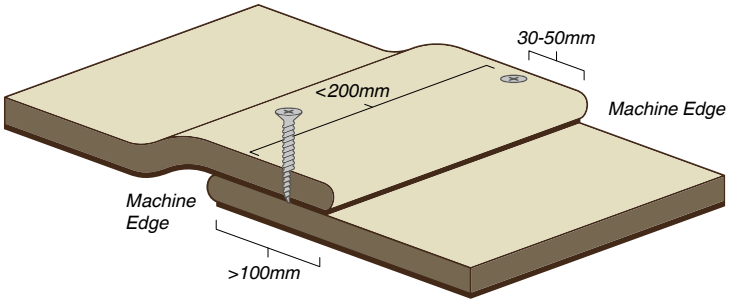

Fig 1. Standard Screwed Overlap Joint

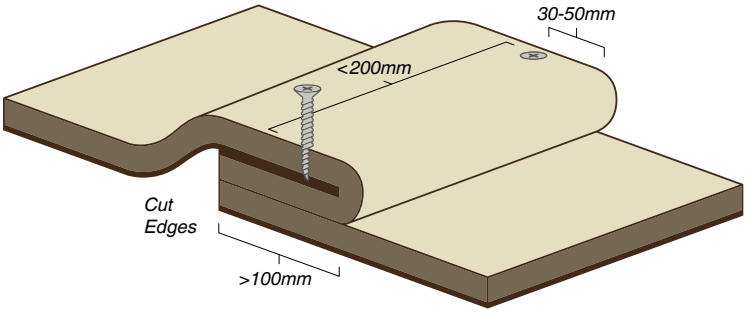

Fig 2. Screwed Knuckle Joint for Cut Edges of CC

3.1 Overlapped Joint

This joint is suitable for the majority of CC applications and involves overlapping adjacent sheets of CC by a minimum of 100mm, (see Fig.1.) For erosion control applications, care should be taken to position the overlap in the direction of water flow (like shingled roof tiles). When jointing cut edges of CC, the material can be folded back on itself to form a knuckle joint, (see Fig.2.) which covers the cut edge and improves the seal between layers. We would recommend securing the overlap with one of the following methods **- please note, it is important to hydrate the material under the overlap before fixing.**

3.2 Screws

Suitable for the majority of applications this joint is fast and simple to apply, it provides good mechanical strength but has limited impermeability. The screws should be applied at 200mm spacing (50mm for bund lining) and 30-50mm from the edge of the CC. The screws should be applied prior to setting but immediately after hydration (CC has 1-2 hours working time in a UK climate), so the concrete within CC will then set around the thread of the screws. For this reason it is important that the screws have a fully threaded shank and a minimum length equal to the full thickness of the joint. Collated screws allow for the use of an auto-fed screwdriver which provides a rapid means of creating a screwed joint. Suitable collated stainless steel screws are available from Concrete Canvas Ltd.

Stainless steel collated screws

CC joint fixed using an autofed screwdriver

+44 (0) 345 680 1908
info@concretecanvas.com
www.concretecanvas.com

3.3 Screws & Sealant

For applications where improved impermeability is required, CC can be jointed with a CC approved adhesive sealant using a caulking gun. This is applied as a single 8mm bead with the screws inserted through the sealant bead where possible to minimise leakage. An 8mm bead is equivalent to a coverage of 50g/m which is equivalent to 5.8m of joint for 290ml cartridge or 12m of joint from a 600ml cartridge. Suitable CC approved adhesive sealants are available from Concrete Canvas Ltd. 200mm screw spacing is suitable for most applications, 50mm is recommended for bund lining. **It is important to hydrate under the overlap prior to applying the adhesive sealant in order to remove excess dust, ensuring contact with the fibrous top surface of the bottom CC layer and to provide moisture for curing.** Surfaces may be damp during installation, but have no standing water.

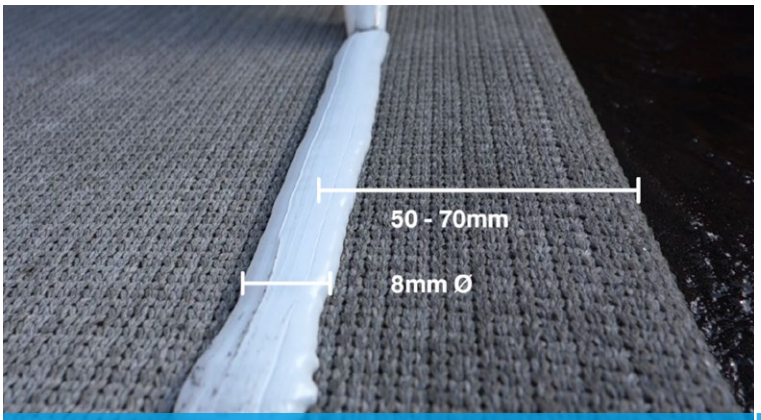

Sealant applied to CC using caulking gun

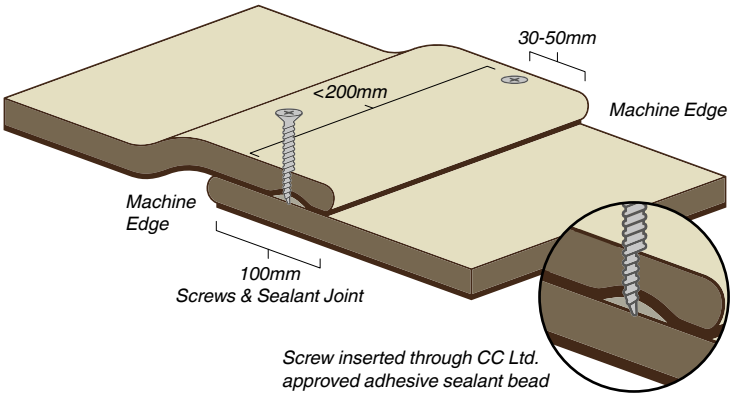

Diagram showing screw inserted through sealant bead

3.4 Hydration of the Overlap

In some circumstances for the above joints, it may not be possible to hydrate underneath the overlap prior to fixing. This is not generally advised, as the underlap material will only be partially hydrated, however it may be acceptable if certain conditions exist. For example, if the joint is going to be continually exposed to water due to the nature of the application, the underlap material will slowly hydrate through infiltration.

Please be aware, that in these instances, the joint strength may be compromised. For example a screwed joint relies on the CC setting around the thread of the screw to reach the strength values overleaf therefore the short-term strength will be significantly lower until full hydration is achieved. **Adhesive sealants also benefit from pre-hydration as this cleans the jointing surface of dry cement dust prior to the application of adhesive and helps to cure the adhesive during setting.** Joints will therefore typically achieve a long-term strength which is 30-40% lower than the published values if the underlap CC is hydrated prior to jointing.


Automatic thermal welding machine


Handheld thermal welding machine

3.5 Thermal Bonding

Thermal Bonding can be used for applications where screws are not suitable, for example when applying CC onto a hard concrete substrate or geomembrane. The joint is formed using either a manual or automatic thermal welding machine to form a bond between the PVC backing of the CC and the polyester top surface.
Please refer to the *CC User Guide: Thermal Bonding* for more details.

4.0 Installation Principles

The unique material properties of Concrete Canvas (CC) mean that it can be used for a variety of applications. Following the Four Installation Principles below will help ensure a successful installation.

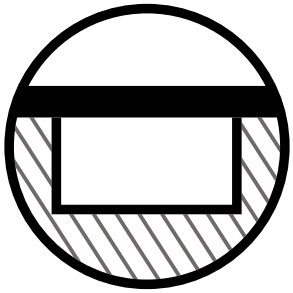

Avoid Voids

1. Avoid Voids

Prepare the substrate so it is well compacted, geotechnically stable and has a smooth and uniform surface.

- For soil substrates, remove any vegetation, sharp or protruding rocks and fill any large void spaces. Ensure the CC makes direct contact with the substrate to minimise soil bridging or potential soil migration under the layer.
- For concrete substrates, remove any loose or friable material, cut away any protruding exposed re-bar and fill any large cracks or voids.

Secure Canvas

2. Secure Canvas

It is important to ensure that the CC is **Jointed** at every overlap between layers and that those layers are **Fixed** to the substrate.

- **Jointing:** Overlapped CC layers should be securely jointed together, typically this is achieved using stainless steel screws applied with an auto-fed screw gun at regular intervals. Correct screw placement will help ensure intimate contact between CC layers, prevent washout of the substrate, and limit potential weed growth. An adhesive sealant can be applied between the layers to improve the joint impermeability.

  A non-penetrative method of jointing is to 'thermally bond' the CC layers together. This also improves joint impermeability. For more jointing options see above.
- **Fixing:** When fixing to a soil substrate, ground pegs (eg J-pegs) are typically used. On rock or concrete substrates, CC layers can be jointed together and fixed to the substrate using masonry bolts, percussion anchors. Stainless steel fixings with washers are recommended.

Prevent Ingress

3. Prevent Ingress

It is important to prevent water or wind ingress between the CC and the substrate, both around the perimeter of the installation and along the joints.

- For soil substrates, this is typically achieved by capturing the entire perimeter edge of the CC within an anchor trench.
- On rocky or concrete substrates, the perimeter edge should be sealed with a concrete fillet or an adhesive sealant.
- All overlapped CC layers should be lapped in the direction of water flow.

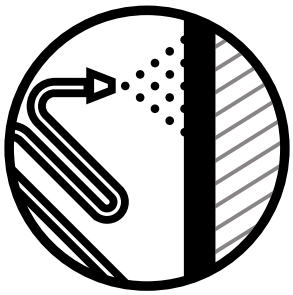

Fully Hydrate

4. Hydrate Fully

It is critical to properly hydrate CC, taking into account the quantity of material used and ambient temperature conditions.

- Always ensure hydration through the fibrous top surface.
- Ensure to hydrate any overlapped areas and anchor trenched material prior to backfilling.
- Spray the fibre surface with water until it feels wet to touch for several minutes after hydration (the 'Thumb Test').
- Follow the *CC User Guide: Hydration*.

+44 (0) 345 680 1908 info@concretecanvas.com www.concretecanvas.com

5.0 Comparison Table

	TENSILE SHEAR STRENGTH*			IMPERME-ABILITY*	INSTALLATION				Recommendation
					Speed	*Skill*	*Tools Required*	*When to use*	
Screwed (200mm spacing)	●●●○○			●○○○○	Fast	Low	Autofeed Screwdriver	Most common joint used on 95% of applications	>30mm stainless steel screws with 200mm spacing installed using autofeed screwdriver
	CCT1™	CCT2™	CCT3™						
	2.0 kN/m	4.0 kN/m	5.0 kN/m						
Screwed and Sealed (200mm spacing)	●●●◐○			●●○○○	Med	Low	Autofeed Screwdriver and Caulking Gun	For applications where a level of impermeability is required	>30mm stainless steel screws with 200mm spacing. Sealed with a CC approved adhesive sealant
	CCT1™	CCT2™	CCT3™						
	3.5 kN/m	5.0 kN/m	5.0 kN/m						
Screwed and Sealed (50mm spacing)	●●●●○			●●○○○	Med	Low	Autofeed Screwdriver and Caulking Gun	For bund lining applications or use in exposed areas prone to significant wind uplift forces	>30mm stainless steel screws with 50mm spacing. Sealed with a CC approved adhesive sealant
	CCT1™	CCT2™	CCT3™						
	7.0 kN/m	13.0 kN/m	15.0 kN/m						
Thermal Bond	●●●●●			●●●○○	Med-Fast	Med-High	Manual or Automatic Thermal Welder and Power Supply	Used where screws are not suitable due to a concrete substrate etc under the CC**▲	Use automatic welder such as a Leister Twinny T or S (The Twinny T has data logging capability) or manual welder such as Leister TRIAC AT with a 60mm slot nozzle
	CCT1™	CCT2™	CCT3™						
	10.5 kN/m	17.0 kN/m	17.0 kN/m						

* Joint strength and impermeability data is intended for guidance purposes only. Joint performance may vary depending on the quality of the installation and the application conditions. Strength data is based on the ultimate strength of a tensile shear test in laboratory conditions, test based on BS EN 12317 1:2000.

** For bund lining or when a level of impermeability is required, and/or when screws are not suitable due to a non-penetrable substrate beneath, such as concrete.

▲ For containment critical applications, CC Hydro™ should be used.

See *CC Equipment List* for full details. *Dust hazard. Wear appropriate PPE. Consult CC & CCH SDS document.*

+44 (0) 345 680 1908 info@concretecanvas.com www.concretecanvas.com